VC 3500

- **Precise double shear beam load cell made of stainless steel**
- **Built-in module with integral lift-off protection**
- **Ideally suitable for silo and vessel weighings**
- **For loads from 2 up to 200 t**
- **Replacement of load cell without removing the module**
- **Module painted, zinc plated or stainless steel**
- **Protection IP 68/ IP 69K**
- **Certified EN 1090 approval for 30t, 50t, 75t and 100t module (optional)**
- **ATEX approval (optionally)**

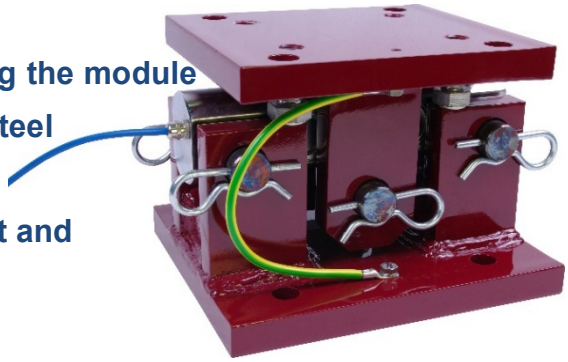

TECHNICAL DATA:

Rated load (R.L.)		**t**	**2; 5; 7.5; 10; 15; 20; 30; 50; 75; 100; 150; 200**
Combined error		% of R.L.	< ± 0.03
Repeatability		% of R.L.	< ± 0.015
Supply voltage	recommended	V DC or AC	5 - 15
	maximum	V DC or AC	18
Input resistance		Ω	785 ± 20
Output resistance		Ω	705 ± 5
Rated output (R.O.)		mV/V	2.0 ± 0.25%
Zero balance		% of R.O.	< ± 2.0
Operating temperature range		°C	- 50 to +80
Compensated temperature range		°C	- 10 to +40
Temperature effect (-10°C to +40°C)			
on output		% of R.O./°C	< ± 0.0012
on zero balance		% of R.O./°C	< ± 0.002
Insulation resistance at 100 V		MΩ	> 5,000
Material	Load cell		stainless steel 17-4PH
	Mounting assembly		alloy steel, durable painted, optional zinc plated or stainless steel
Electrical connections			20 m shielded PUR cable, 4 core
Protection			IP 68 / IP 69K

Options ATEX certification:
II 1 GD
Ex ia IIC T6 Ga
Ex is IIIC T70°C Da
II 3 G
Ex nA T6
II 1 D
Ex ta IIIC T80°C Da

DIMENSIONS:

Weighing module VC 3500

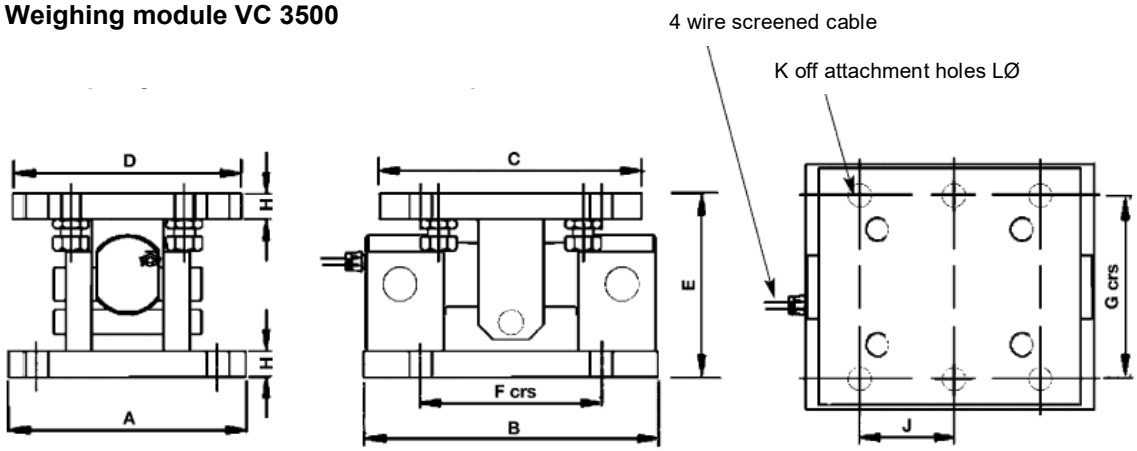

The VC 3500 weighing module comes with the standard mounting kit, top plate with lift-off protection and jacking bolts for routine maintenance and calibration.

Rated load in t	A	B	C	D	E	F	G	H	J	K	LØ	Module weight in kg
2; 5; 7.5; 10; 15; 20	180	235	235	180	137	155	140	20	-	8	18	22
30; 50	250	300	250	220	210	175	175	25	-	8	22	43
75	250	360	330	250	250	200	180	25	100	12	22	60
100	350	450	440	350	275	300	235	30	150	12	26	113
150; 200	350	440	440	350	325	310	285	30	155	12	32	120

All dimensions in mm.

Design loading limits calculated according to Eurocode 3 (EN 1993):

	Module made of galvanised steel, painted				
	2 - 20 t	**30 - 50 t**	**75 t**	**100 t**	**150 - 200 t**
Max. vertical load	780 kN	950 kN 1,300 kN	1,700 kN	2,580 kN	5,280 kN
Max. Lift-off	31 kN	180 kN	290 kN	195 kN	607 kN
Max. transverse load	39 kN	107 kN	87 kN	115 kN	170 kN
Max. end load	106 kN	275 kN	350 kN	385 kN	853 kN
Max. of movability of the top plate	+/- 5 mm	+/- 9 mm	+/- 9 mm	+/- 12 mm	+/- 12 mm

Loading limits stainless steel version and EN 1090 version available on request.

Typical applications:

Outdoor silo and vessel weighing with high loads and in harsh industrial environments.

The module is largely insensitive against heat, humidity and chemicals.

Electrical connections:

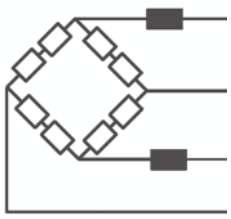

+ Excitation:	red
+ Signal:	green
- Excitation:	blue
- Signal:	yellow

Installation:

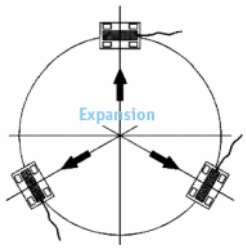

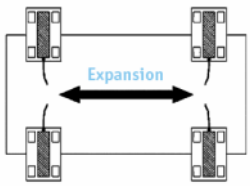

The right of technical data is reserved.
D00147e State: 01/2023